Pneumatic Actuators

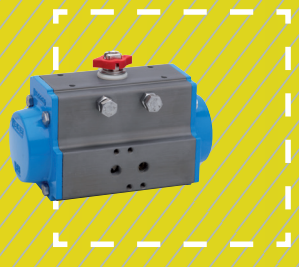

Use	Suitable for the automation of ball and butterfly valves

Features and benefits

- Available in spring return or double acting versions
- 0°-90° standard rotation or 0°-180° option
- Patented design
- Special finishes nickel-plating or P.T.F.E coated for corrosive environments upon request
- IP67 rated enclosure
- Namur solenoid and switchbox connections
- ISO5211 mounting platform
- NBR seals as standard
- High temperature viton option
- Low temperature silicone option
- Visible position indicator
-
- **Series 82** - aluminium with 0°-90° rotation
- **Series 83** - aluminium with 0°-180° rotation
- **Series 84** - stainless steel with 0°-90° rotation

Size	Dependant on valve torque
Body	Aluminium or stainless steel
Pressure	Max 8 bar

Components

No.	Description
1	Body manufactured from extruded aluminium uni 6060
2	Concentric spring sets
3	Die cast aluminium end caps
4	Assembling screws
5	Pinion made in steel
6	Cam for limit position adjustment 0°-90°
7	0-90° adjustment screws
8	Piston guides in pom
9	Pistons made from die cast aluminium
10	Seals

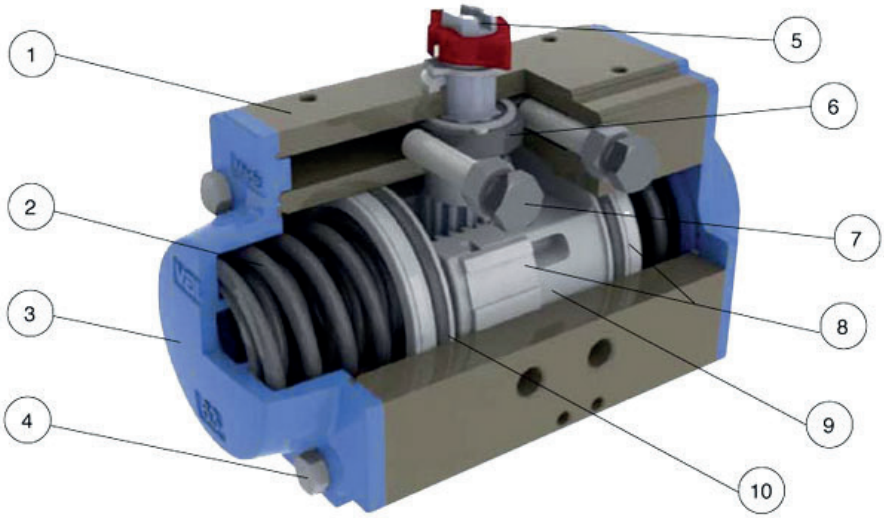

ANTI-BLOWOUT SYSTEM

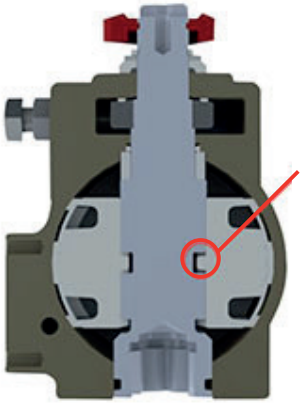

Piston provided with anti-blowout flat key

MOUNTING VARIATIONS

View from the top of the pinion

Closed **Open**

Counterclockwise rotation

Clockwise rotation

Andy Hatton
Renewable Gas Sales Engineer
M: +44 (0) 7395 795814
E: anha@avkuk.co.uk

Website AVK UK Ltd @avk_uk avkuk limited